# 6V_6214U_65_HTV_EU_240x159_MT5596_v0.2_20210712

| | PART | COLOUR | TECHNIQUE | CHANGES / REMARKS | V |
|---|---|---|---|---|---|
| I | PHILIPS LOGO | Cool Grey 3C | SILKSCREEN PRINTING | ON HIGH GLOSS SURFACE | 00 |
| J | STICKER AREA | | INMOLDED | ON POLISHED SURFACE | 00 |
| K | ALL TEXTS, ICON AND CAUTION LABELS | | ENGRAVED | ENGRAVED 0.3 (DEPTH 0.3 MM) | 00 |

LABEL DOWN IO TEXT FONTS: CentraleSansCnd Bold 10pt

LABEL SIDE IO TEXT FONTS: CentraleSansCnd Bold 10pt

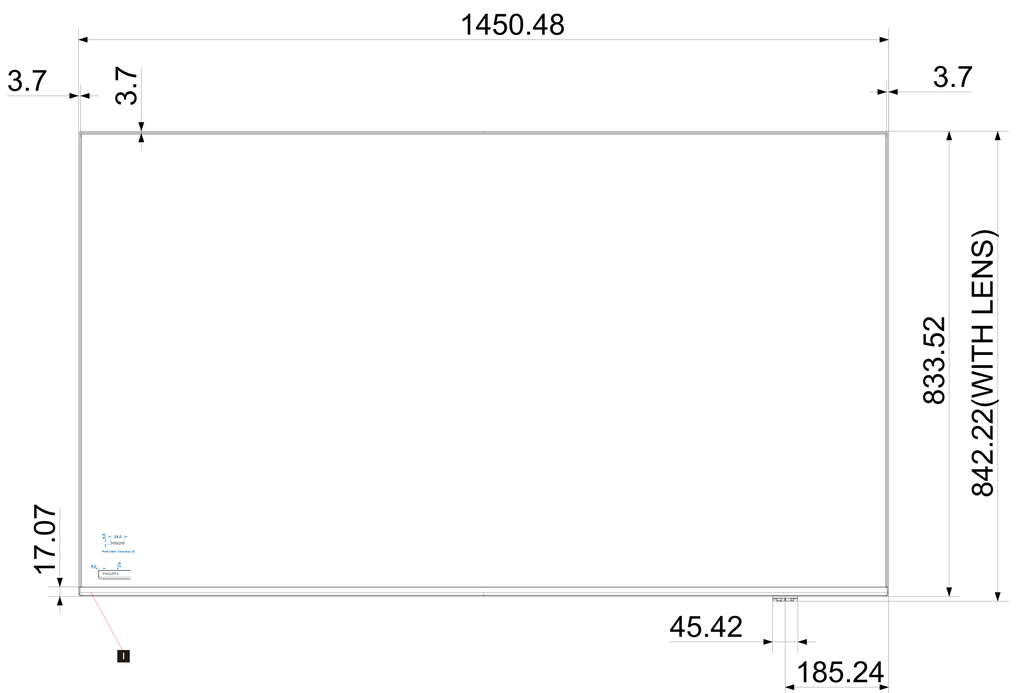


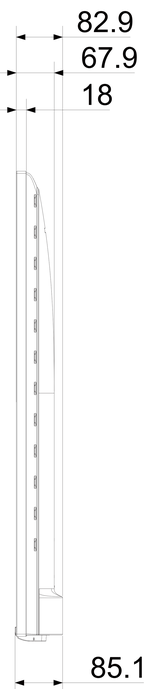


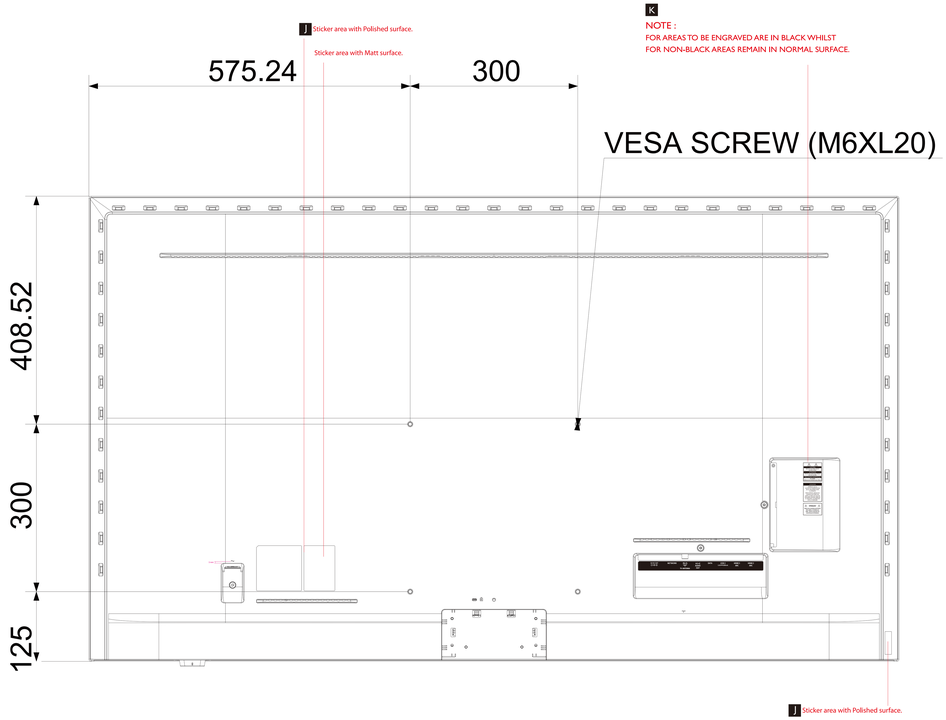


K

NOTE :

FOR AREAS TO BE ENGRAVED ARE IN BLACK WHILST
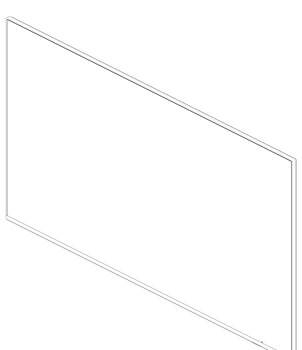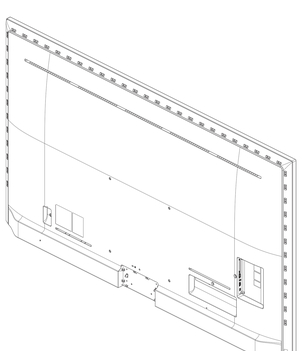
FOR NON-BLACK AREAS REMAIN IN NORMAL SURFACE.