RoHS Compliant

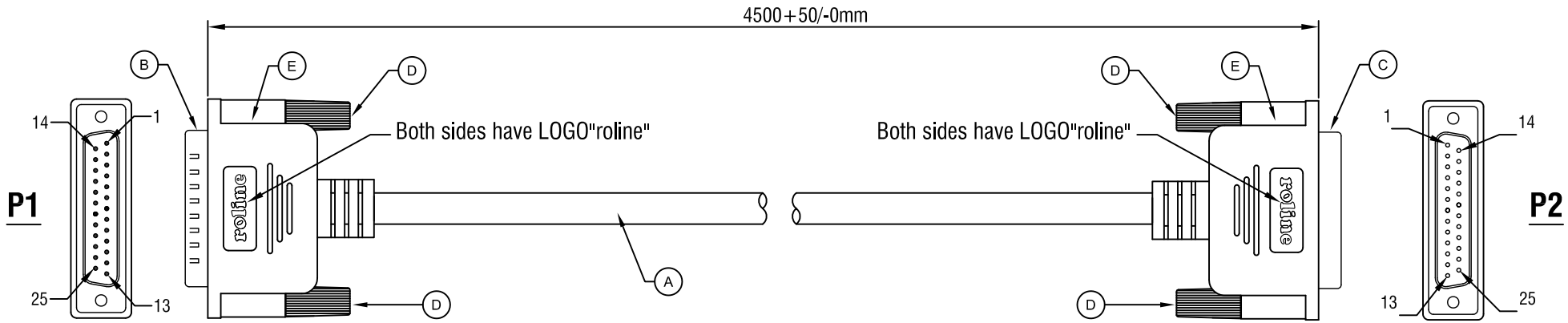

WIRE ADDRESS

P1	P2	P1	P2
1	1	14	14
2	2	15	15
3	3	16	16
4	4	17	17
5	5	18	18
6	6	19	19
7	7	20	20
8	8	21	21
9	9	22	22
10	10	23	23
11	11	24	24
12	12	25	25
13	13	Shell	Shell

Electrical Test:
1.100% TEST OPEN SHORT MIS-WIRE.
2.CONTACT RESISTANCE:3Ω MAX.
3.INSULATION RESISTANCE:5MΩ MIN.
4.HI-POT:300V DC/10MS.

NUMBER	PRODUCT SPECIFICATIONS	Quantity	Unit
E	45P PVC BEIGE		G
D	Screw:#4-40UNC(Nickel Plated,Beige)	4	PCS
C	DB 25P FEMALE(Blue Insulator, Nickel Plated)	1	PCS
B	DB 25P MALE(Blue Insulator, Nickel Plated)	1	PCS
A	NON-UL 30AWG*25C+AD,OD=7.0mm BEIGE PVC JACKET.	1	PCS

ROLINE RS-232 Cable, DB25 M - F, 4.5m

Item	11.01.3645	
Draw	Kobe	Date: 2020.05.13
Approval		
Duty	F16	BOM.NO:13893

SECOMP

Sample NO. | Drawings of 1 (2) | Proportion: 1:1 | Unit(mm) | A4