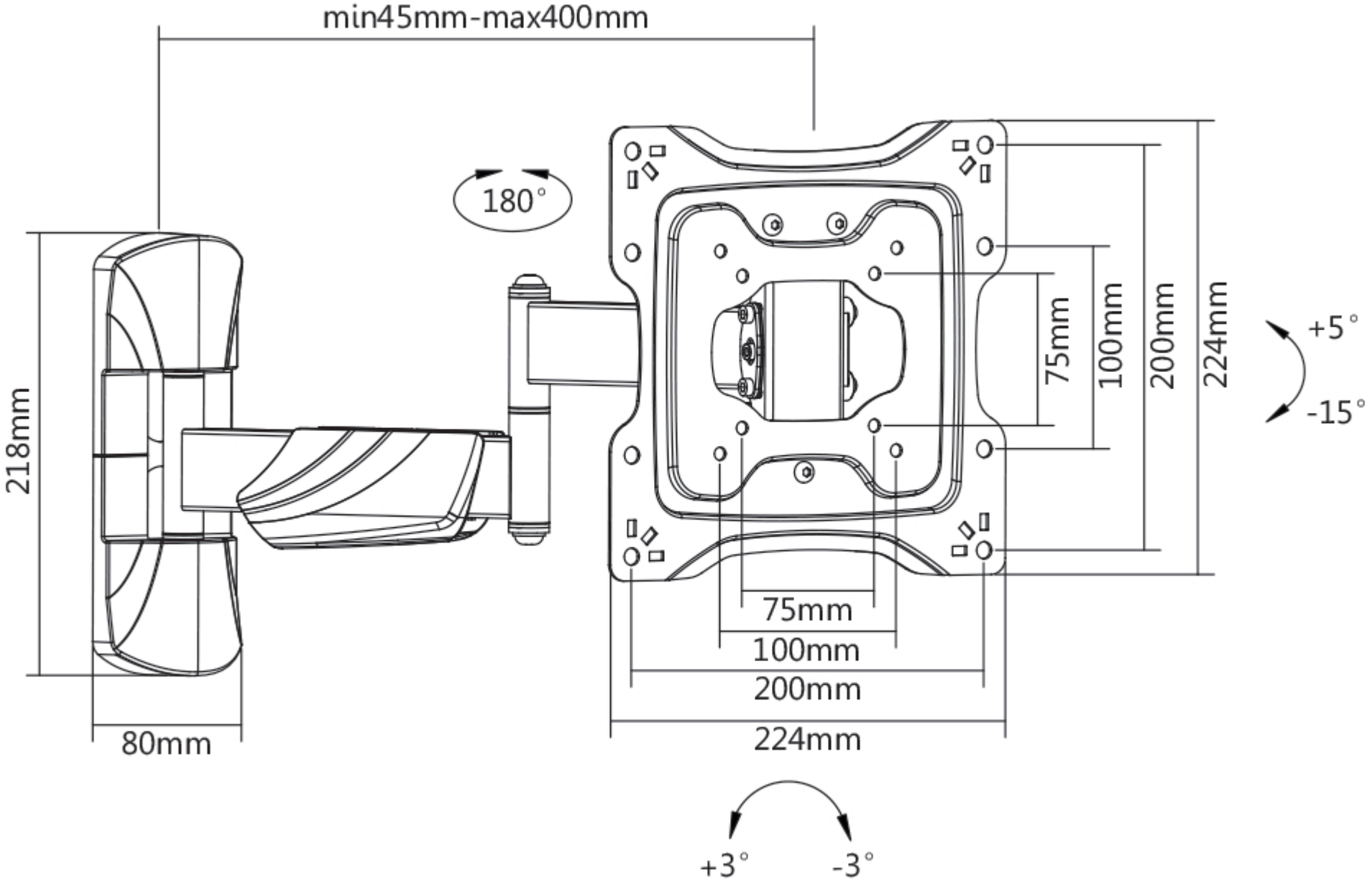
min45mm-max400mm
180°
218mm
80mm
75mm
100mm
200mm
224mm
75mm
100mm
200mm
224mm
+5°
-15°
+3°
-3°